Bourdon Tube Pressure Gauges

Bayonet Ring Case Stainless Steel

RCh 40
RChG 40

Standard Versions

Information on general and metrological features (load limits / temperature limitations) and standard pressure ranges / scale divisions can be found in model overview 1000.

Genauigkeit (EN 837-1)
Class 1.6
Class 2.5 for pressure ranges 0-600 bar
(0-10,000 psi)

Case
Bayonet ring, 1.4301 (304 stainless steel)

Case Protection Type (EN 60 529 / IEC 529)
IP 54,
IP 65 for model RChG

Case Ventilation

for model RCh	ventilation bore at the bottom of the case coverage (Ø 1 mm / 0.04")
for model RChG	without ventilation, but with internal pressure compensation by pressure equalizing membrane for pressure ranges up to 0-16 bar (0-200 psi)

Gehäusefüllung
for model RCh**G**: glycerine

Nominal Case Size
40 (mm) (1½")

Wetted Parts

Connection:	1.4571 (316 stainless steel)
Bourdon Tube:	1.4571 (316 stainless steel), argon arc welding, ≤ 100 bar (1,500 psi) c-form, ≥ 160 bar (2,000 psi) helical

Case Configuration

Connection:	screwed
Position of the connection:	bottom connection, optional centre back connection **(rm)**
Mounting device:	without, optional front flange for panel mounting **(Fr)** or u-clamp for panel mounting **(BFr)**, see page 2

Pressure Ranges (EN 837-1)
0-1 bar (0-15 psi) to 0-600 bar (0-10,000 psi)

Process Connection
⅛ "NPT

Window
Polycarbonate

Movement
Stainless steel

Dial
Aluminum, black figures, white background

Pointer
Aluminum, black

Ordering Information, Standard Pressure Ranges, Options:

see pages 3 and 4

Special Versions and further options among others

- Other process connections upon request
- Other pressure ranges and / or special scales, e.g. double scale bar/psi, coloured fields or areas, dial inscriptions, negative scale etc.
- Case parts 1.4404 (316 L stainless steel) upon request
- Increased case protection type, e. g. IP 65 without case filling, upon request
- Other case fillings upon request
- Versions for medium temperatures up to 300 °C (572 °F), but without case filling upon request
- Position of connection radial at 3 o´clock, 9 o´clock or 12 o´clock (others upon request) or other than vertical installation (90°):
  - for models without case filling and for filled models with pressure equalizing membrane;
  - for filled models without pressure equalizing membrane upon request
- GOST-version for Russia, Ukraine, Kazakhstan

Accessory:

Chemical seals: see catalogue-heading 7
Other accessory: see catalogue-heading 11

Sales and Export South, West, North
ARMATURENBAU GmbH
Manometerstraße 5 • D-46487 Wesel - Ginderich
Tel.: +49 (0) 28 03 / 91 30–0 • Fax: +49 (0) 28 03 / 10 35
armaturenbau.com • mail@armaturenbau.com

Subsidiary Company, Sales and Export East
MANOTHERM Beierfeld GmbH
Am Gewerbepark 9 • D-08344 Grünhain-Beierfeld
Tel.: +49 (0) 37 74 / 58–0 • Fax: +49 (0) 37 74 / 58–545
manotherm.com • mail@manotherm.com

Case Configurations, Code Letters, Dimensional Data and Weights, Blow-out Device

Bottom connection

Centre back connection

No mounting device

(no additional code letter)

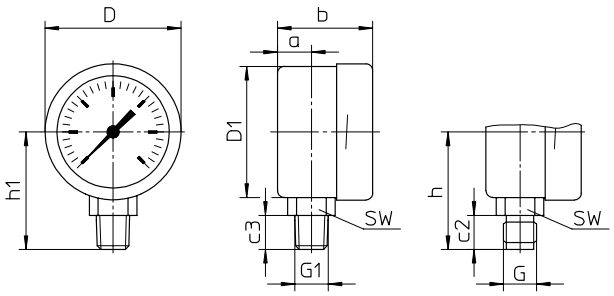

code letters: **rm**

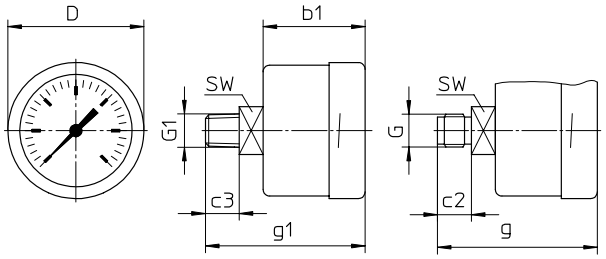

Front flange for panel mounting

code letters: **rmFr**

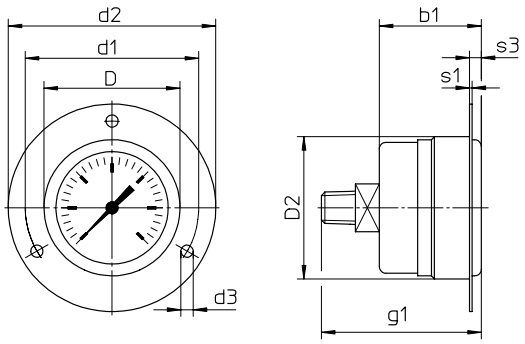

recommended panel cut out for Ø 43 ± 0.5 (0.02")

U-clamp for panel mounting

code letters: **rmBFr**

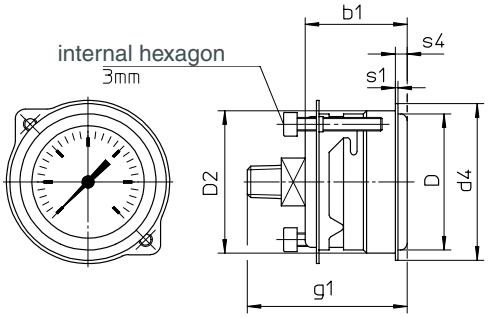

recommended panel cut out for Ø 42.5 ± 0.3 (0.01")

Dimensional data (mm / inches) and weights (kg / lb)

NCS	a	a1	b	b1	b2	b3	c	c1	c2	c3	D	D1	D2	d1	d2	d3	d4	e	G	G1	g	g1	h ±1
40 **1½"**	10 **.4**	–	28 **1.10**	30 **1.18**	–	–	–	–	10 **.4**	10 **.4**	40 **1.57**	38.5 **1.52**	41.8 **1.64**	51 **2.01**	61 **2.4**	3.6 **.14**	46 **1.81**	–	G ⅛ B **⅛"BSP**	⅛" NPT	47 **1.85**	47 **1.85**	34.5 **1.36**

h1 ±1	s	s1	s2	s3	s4	SW	SW1	approx. weight [1] RCh	RChG
34.5 **1.36**	–	0.8 **.03**	–	3.5 **.14**	3.5 **.14**	14 **.55**	–	0.07 **.15**	0.10 **.22**

[1] Information for version without mounting device

Ordering Information, Standard Pressure Ranges, Options

Basic Model:	Bourdon Tube Pressure Gauge, Bayonet Ring Case		RCh
Case Filling	without		without code letters
	glycerine		**G**
	fillable version		**(G)**
Nominal Case Size:	case- Ø 40 (mm) (1½")		**40**
Wetted Material:	stainless steel		**–3**
Case Configuration:	case / connection	screwed	without code letters
	position of the connection:	bottom connection	without code letters
		centre back connection	**rm**
	mounting device:	front flange for panel mounting	**Fr**
		u-clamp for panel mounting	**BFr**
Pressure Ranges:	-1,200 – 0 mbar	30" hg vac. – 0	
	-1 – 0 bar		
	-1 – 0.6 bar	30" hg vac. – 15 psi	
	-1 – 1.5 bar	30" hg vac. – 30 psi	
	-1 – 3 bar	30" hg vac. – 60 psi	
	-1 – 5 bar	30" hg vac. – 100 psi	
	-1 – 9 bar	30" hg vac. – 160 psi	
	-1 – 15 bar	30" hg vac. – 200 psi	
		30" hg vac. – 300 psi	
	0 – 1 bar	0 – 15 psi	
	0 – 1.6 bar		
	0 – 2.5 bar	0 – 30 psi	
	0 – 4 bar	0 – 60 psi	
	0 – 6 bar	0 – 100 psi	e. g. **0-6 bar**
	0 – 10 bar	0 – 160 psi	
	0 – 16 bar	0 – 200 psi	
	0 – 25 bar	0 – 300 psi	
	0 – 40 bar	0 – 600 psi	
	0 – 60 bar	0 – 800 psi	
		0 – 1,000 psi	
	0 – 100 bar	0 – 1,500 psi	
	0 – 160 bar	0 – 2,000 psi	
	0 – 250 bar	0 – 3,000 psi	
		0 – 4,000 psi	
	0 – 400 bar	0 – 5,000 psi	
	0 – 600 bar	0 – 10,000 psi	
Process Connection:	standard thread	⅛" NPT	**⅛" NPT**
	options:	G ⅛ B (⅛"BSP)	**G ⅛ B**
		only for centre back connection (rm) ¼" NPT	**¼" NPT** (connection rm)
		G ¼ B (¼"BSP)	**G ¼ B** (connection rm)
		M 12 x 1.5	**M 12 x 1,5** (connection rm)
Options:	see page 4		

Example:	RCh 40-3 rmFr, 0-6 bar, ⅛" NPT

Further Options regarding Ordering Information

Basic Model:	Bourdon Tube Pressure Gauge, Bayonet Ring Case			RCh
Model Code:				see page 3
Options:	red mark	on the dial		
	receiver gauge 0.2-1 bar, scale 0-100%, only as model RCh		linear	
			square	
	special adjustment (reference points = odd values, e. g. 100 KN = 8.735 bar)			
	window	instrument glass		
	case polished			
	bayonet ring polished			
	density examination of the measuring unit	with helium leak detection up to 10^{-9} mbar l/s		
	wetted parts, free of grease and oil, up to 0-600bar (0-10,000 psi)	adjustment ≤ 250 bar (3,000 psi) with dry air, ≥ 400 bar (5,000 psi) with distilled water, dial marking: symbol cancelled oil can		
	oxygen version up to 0-600 bar[1] (0-10,000 psi)	free of grease and oil, additional restrictor screw in the inlet port, orifice Ø 0,3 mm (0.01"), dial inscription: oxygen with option saftey category S2 (see below)		*(order at the moment still as cleartext)*
	silicone-free version			
	safety category S2	for versions without case filling blow-out plug 19		
	restrictor screw in pressure inlet port material: as process connection stainless steel	orifice Ø 0.6 mm (0.02")		
		orifice Ø 0.3 mm (0.01")		
	measuring point marking	stainless steel-plate12 mm x 55 mm (0.47" x 2.17"), wire mounting		
		or sticker on case coverage		

Special Versions: Please describe your requirements clearly

[1] for instruments without case filling

Technical changes, replacement of materials and errors excepted.